MEPU

PART OF ARSKA GROUP



S/M/C Yhden elevaattorin huoltotason kasausohje SEI35/14 ja SEI50/18

REV 1

Arska Tehtaat Oy

Osaluettelo

POS	KOODI	140159	140159_1	NIMI	TYYPPI
1	138281	1	1	Portti	
2	138731	13	13	Kaide	
3	138734_1445	2	2	Ohutseinäputki	25x45 L=1445
4	138734_2180	2	2	Ohutseinäputki	25x45 L=2180
5	138734_2245	4	4	Ohutseinäputki	25x45 L=2245
6	139127	2	2	Tukilevy	
7	139662	3	3	Tukilevy	S-Sarja
8	139718_2	1	1	Tikkaat	h=2m
9	140122	4	4	Palkki	SEI 50/18
10	140123	4	4	Palkki	SEI 50/18
11	140124	2	2	Palkki	SEI 50/18
12	140125	4	4	Ritilä	SEI 50/18
13	140142	4	4	Tukilevy	SEI 50/18
14	140144	2	2	Potkulista	SEI 50/18
15	140147	4	4	Tukilevy	SEI 50/18
16	140148	2	2	Potkulista	SEI 35/14 SEI 50/18
17	140149	2	2	Kaulus	SEI 50/18
18	140160	1	1	Potkulista	SEI 50/18
19	140161	1	1	Potkulista	SEI 50/18
20	140162	1	1	Potkulista	SEI 50/18
21	140163	2	-	Ritilä	SEI 50/18
22	140164	2	2	Tukilevy	SEI 50/18
23	912513	52	52	Poraruuvi	4.8x25
24	923645	247	247	Laippamutteri	M8
25	923653	247	247	Laippapultti	M8×16
26	140163_1	-	2	Ritilä	SEI 35/14

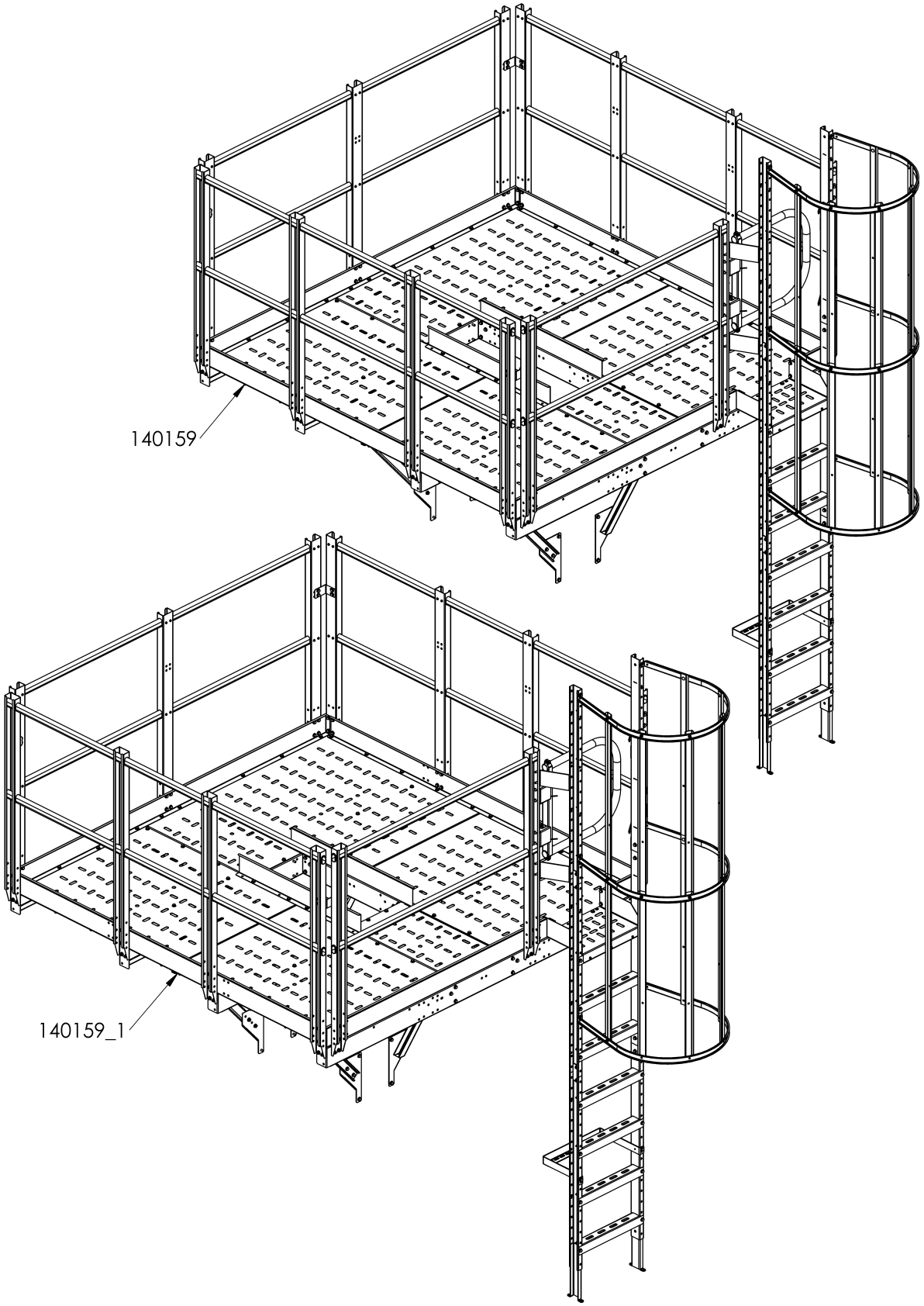
140159
140159_1

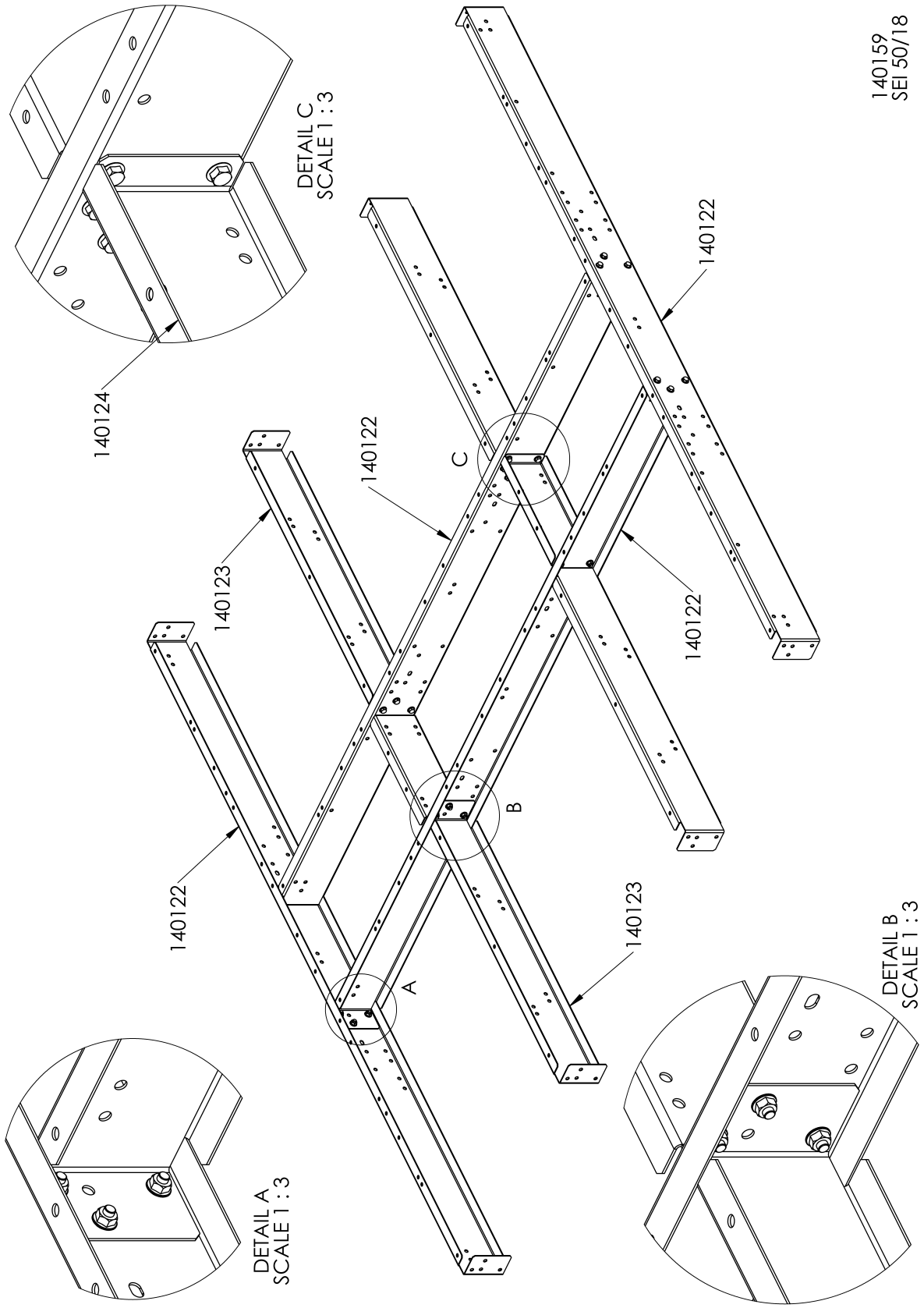
140159
SEI 50/18
140122
140124
DETAIL C
SCALE 1 : 3
140122
C
140123
140122
B
140122
140123
A
DETAIL A
SCALE 1 : 3
DETAIL B
SCALE 1 : 3

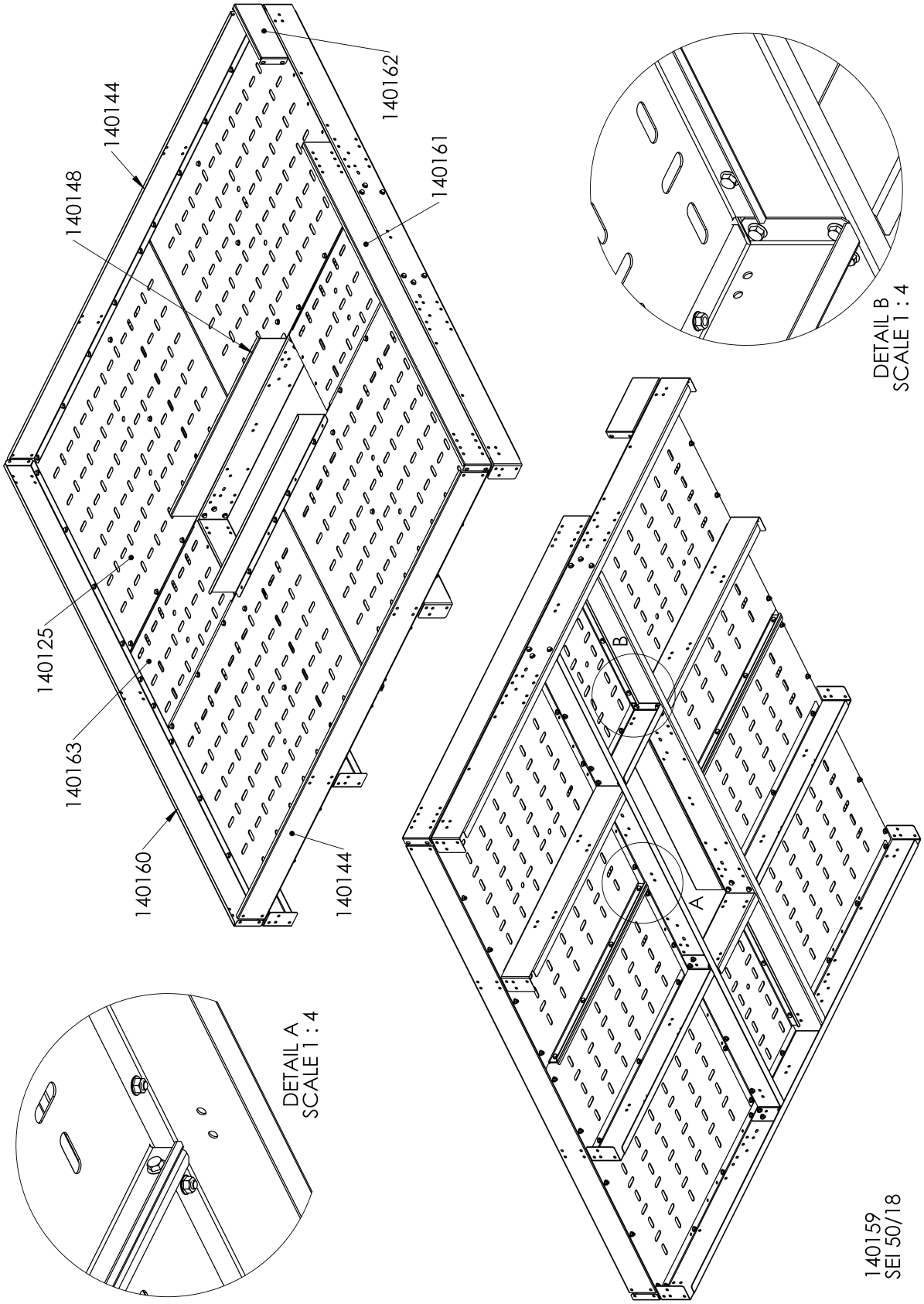
140144
140148
140162
140161
140125
140163
140160
140144
DETAIL B
SCALE 1 : 4
B
A
DETAIL A
SCALE 1 : 4
140159
SEI 50/18

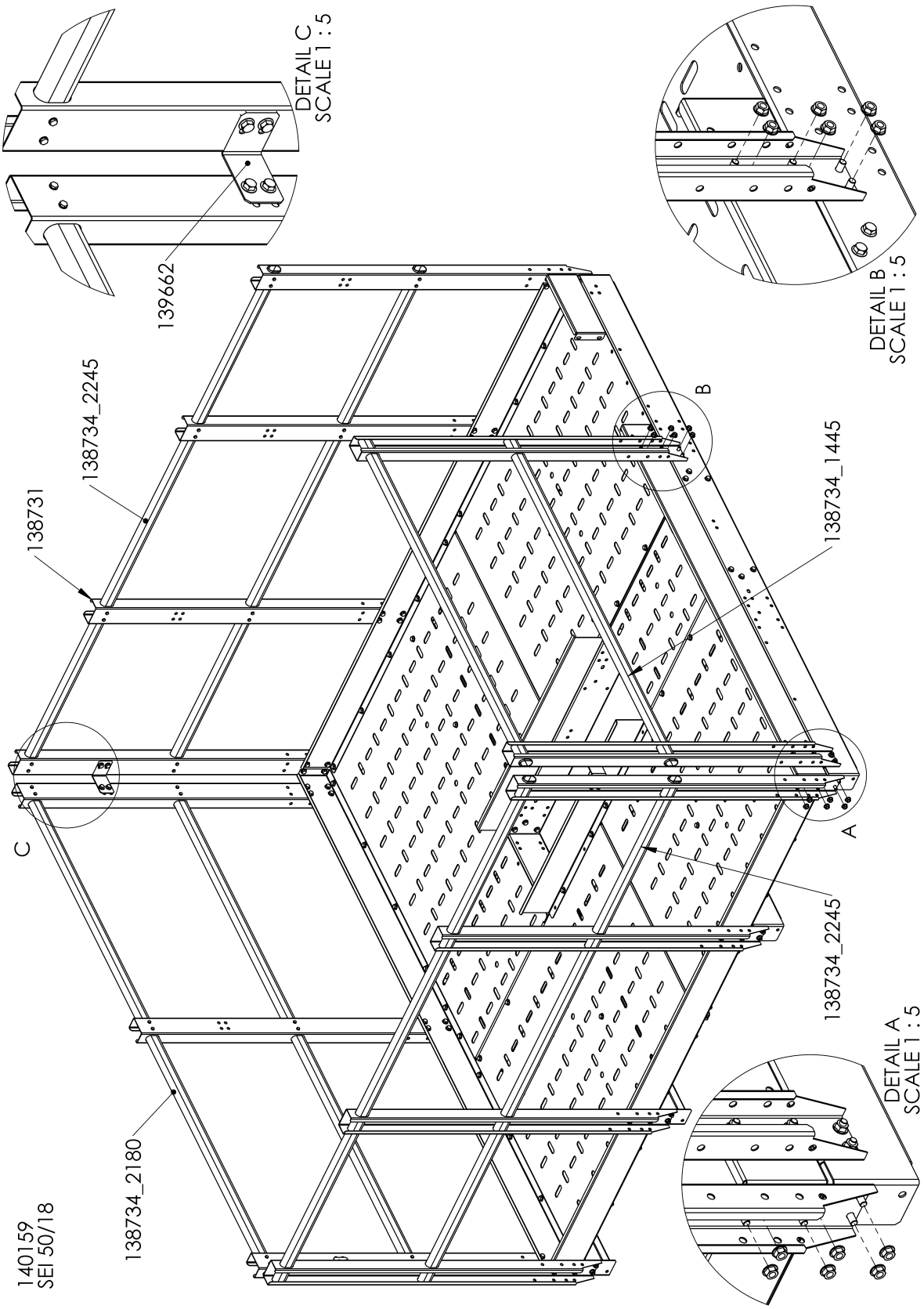
DETAIL C
SCALE 1 : 5
139662
DETAIL B
SCALE 1 : 5
138734_2245
138731
B
138734_1445
C
A
138734_2245
DETAIL A
SCALE 1 : 5
138734_2180
140159
SEI 50/18

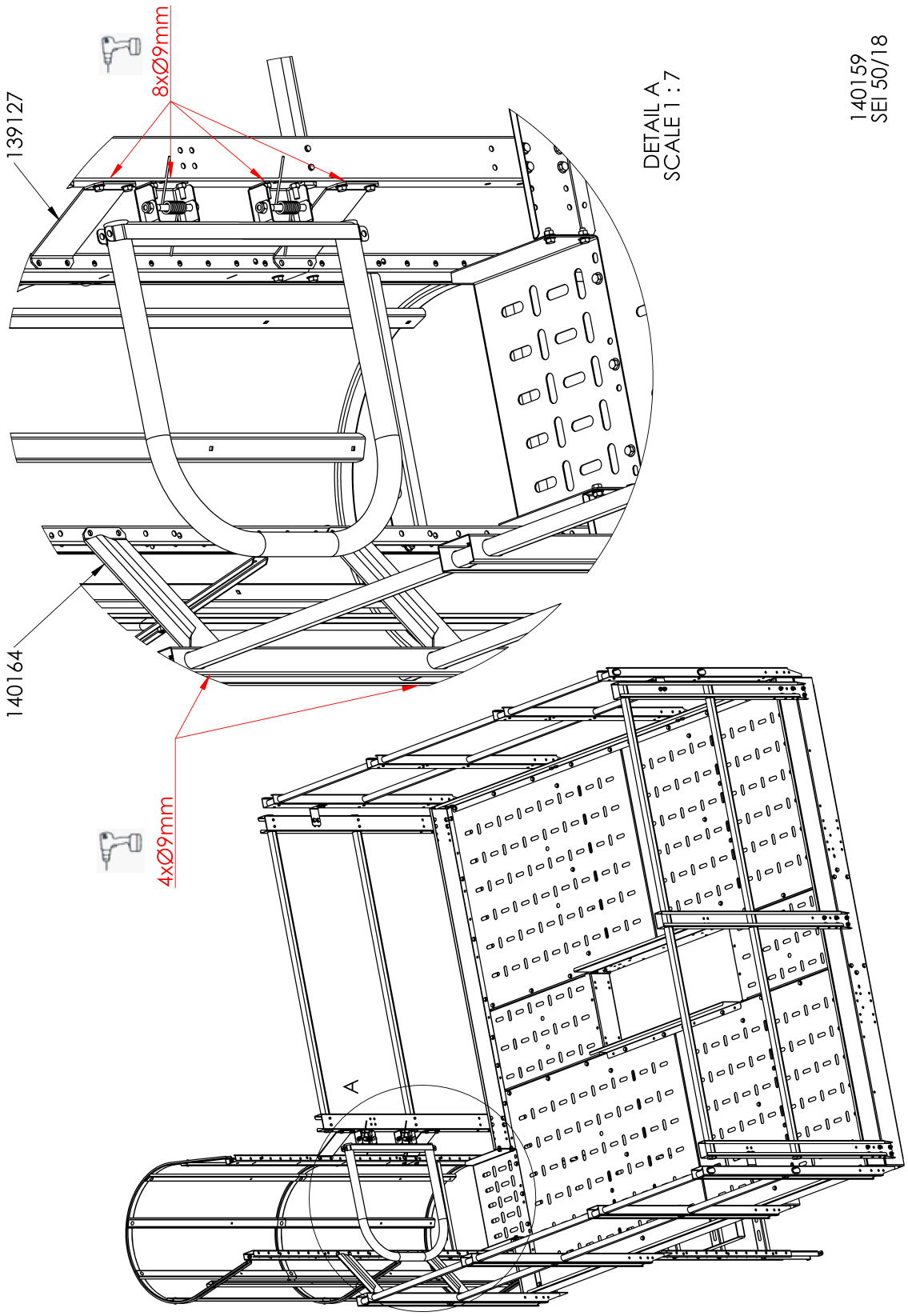
8xØ9mm
139127
DETAIL A
SCALE 1 : 7
140159
SEI 50/18
140164
4xØ9mm
A

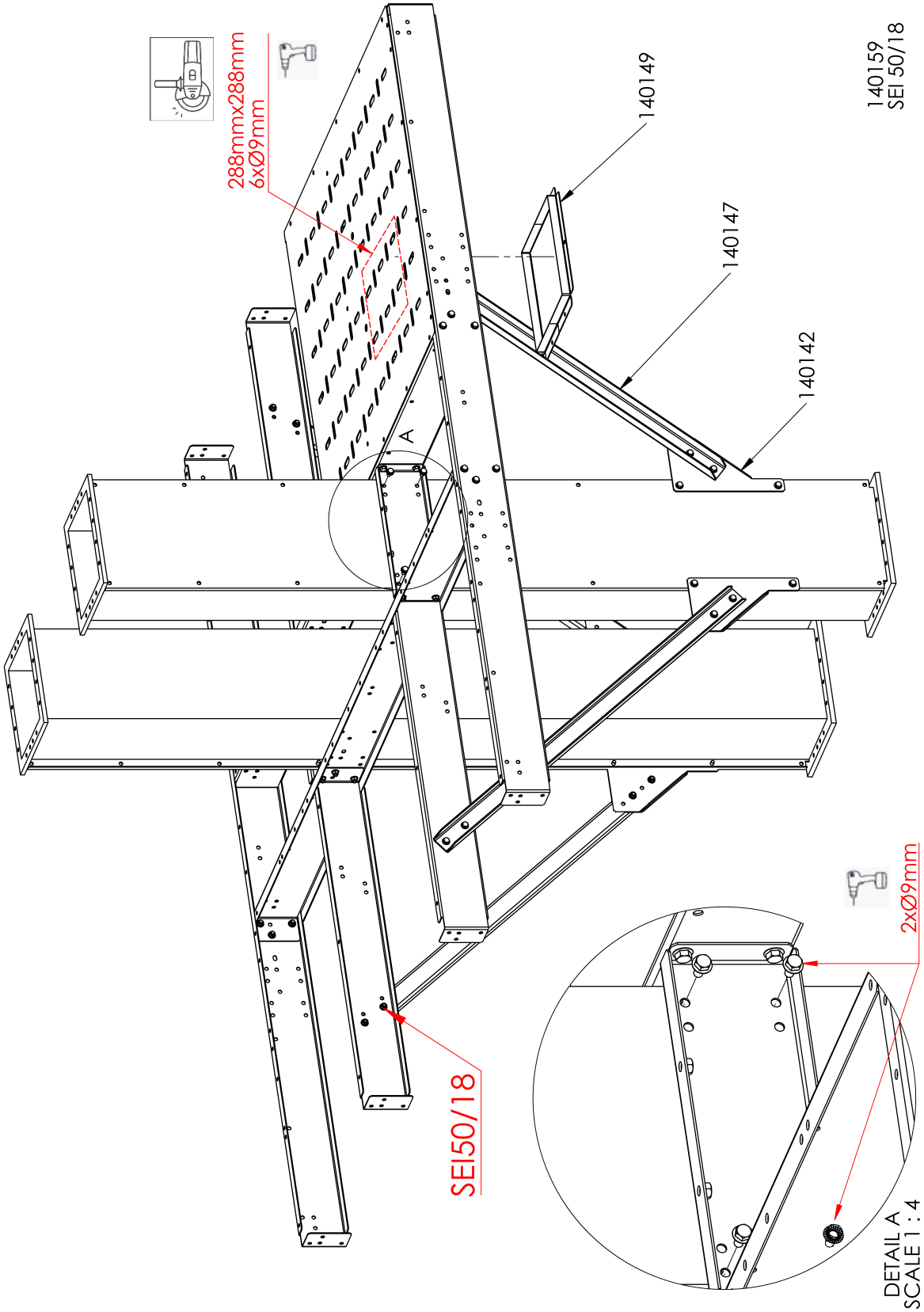
288mmx288mm
6xØ9mm
140149
140147
140142
140159
SEI 50/18
A
SEI50/18
2xØ9mm
DETAIL A
SCALE 1 : 4

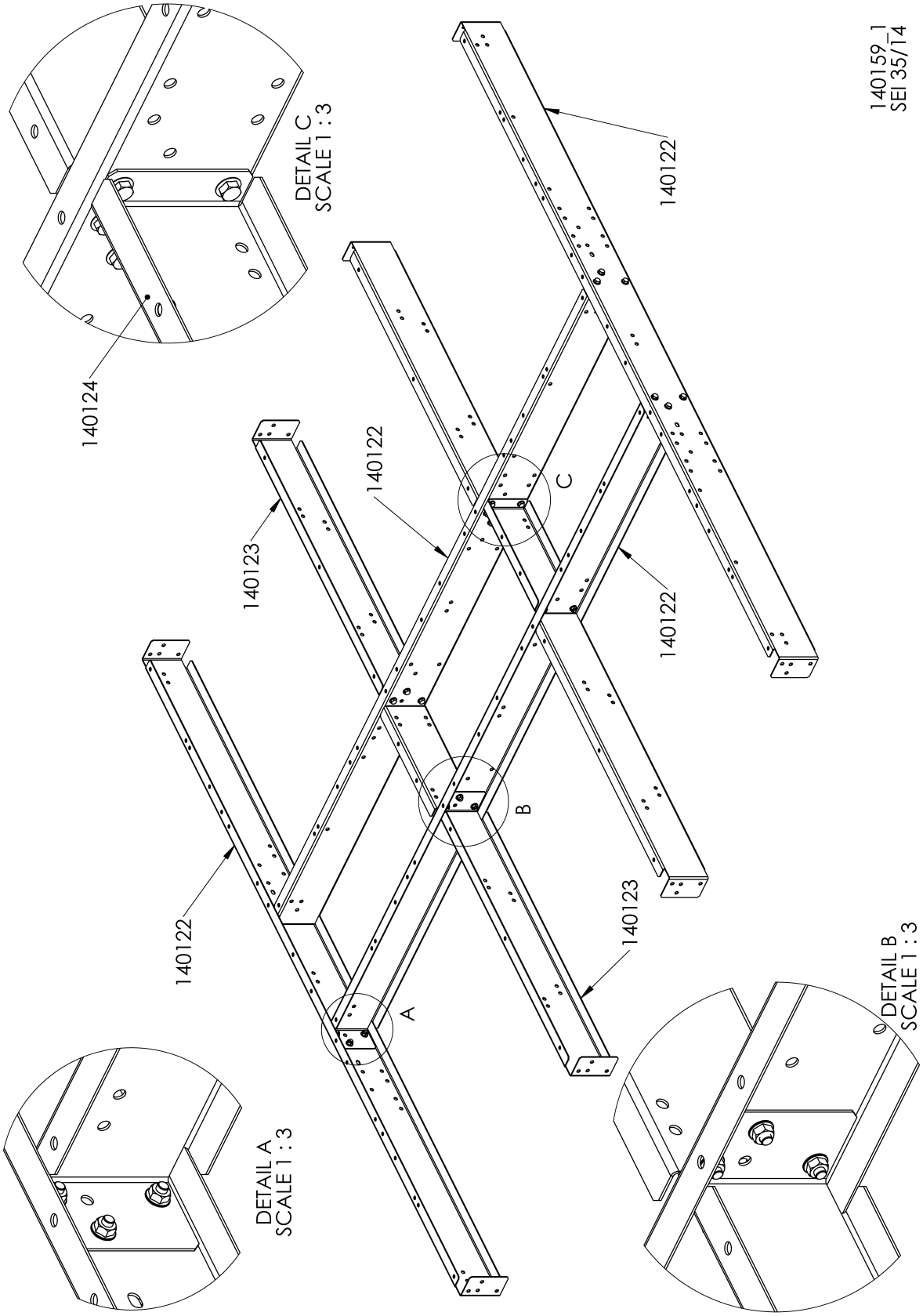
140159_1
SEI 35/14
140122
140122
140122
140122
140123
140123
140124
A
B
C
DETAIL A
SCALE 1 : 3
DETAIL B
SCALE 1 : 3
DETAIL C
SCALE 1 : 3

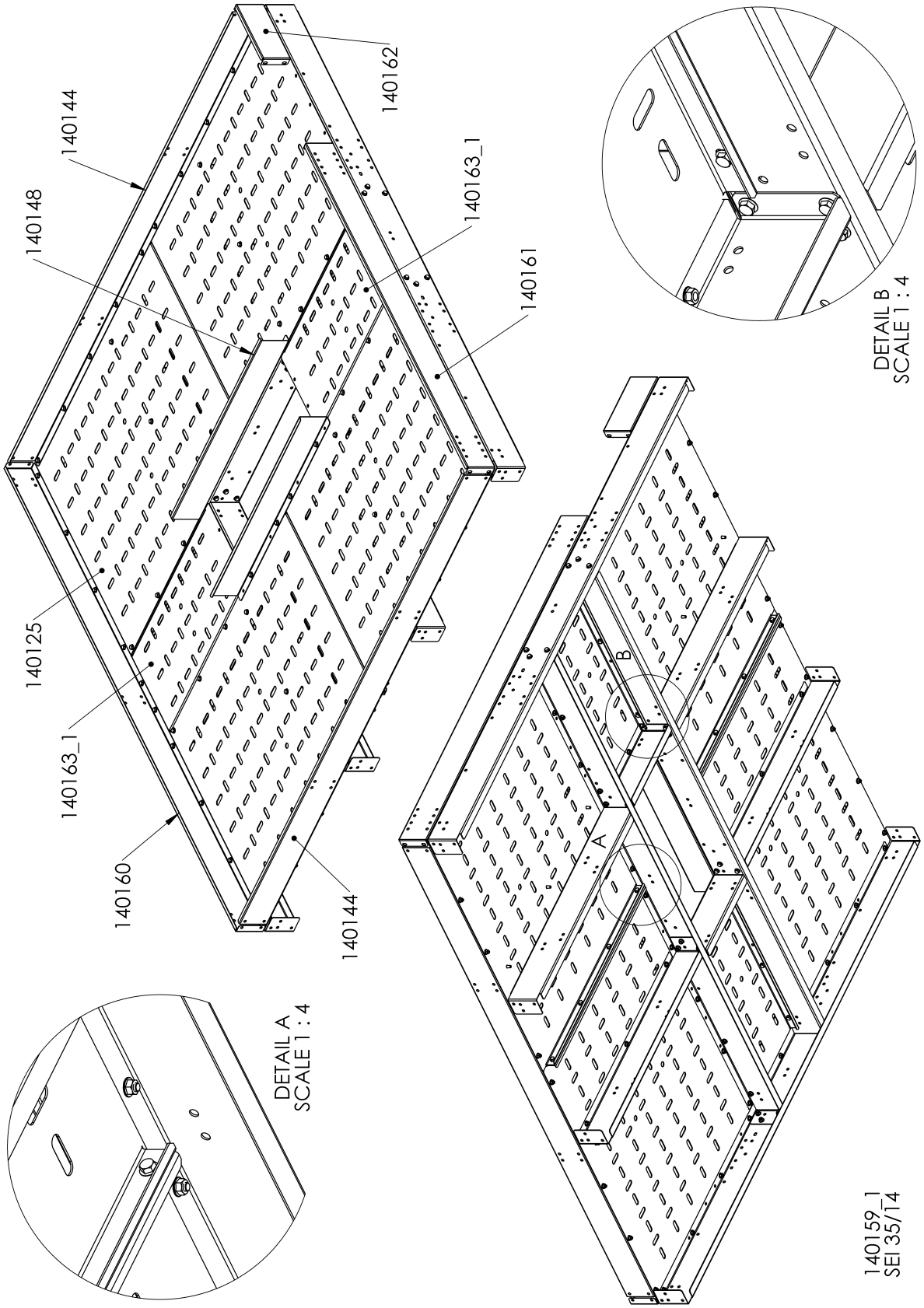
140162
140144
140148
140163_1
140161
140125
140163_1
140160
140144
DETAIL B
SCALE 1 : 4
B
A
DETAIL A
SCALE 1 : 4
140159_1
SEI 35/14

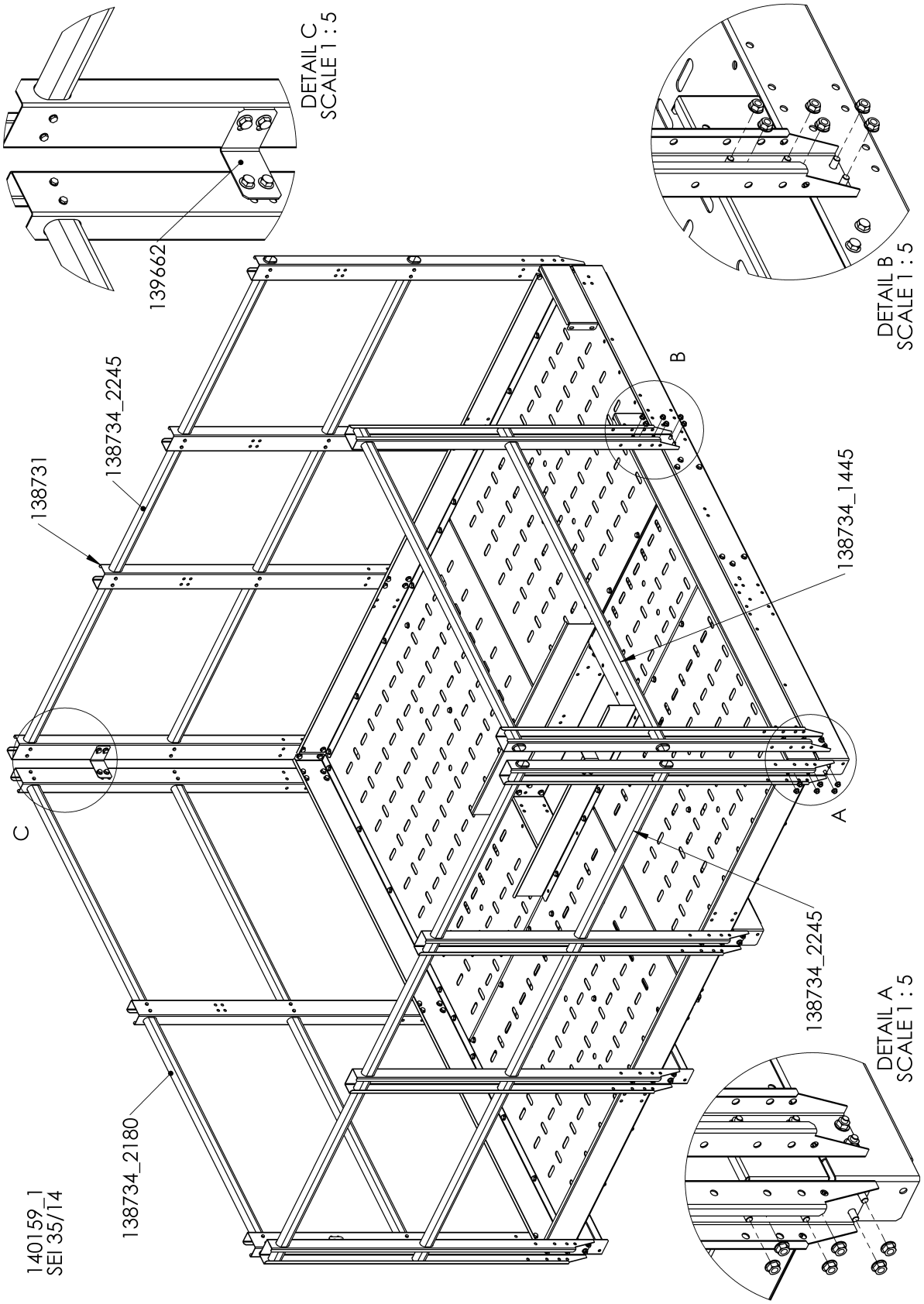
DETAIL C
SCALE 1 : 5
139662
DETAIL B
SCALE 1 : 5
B
138734_2245
138731
138734_1445
C
A
138734_2245
DETAIL A
SCALE 1 : 5
138734_2180
140159_1
SEI 35/14

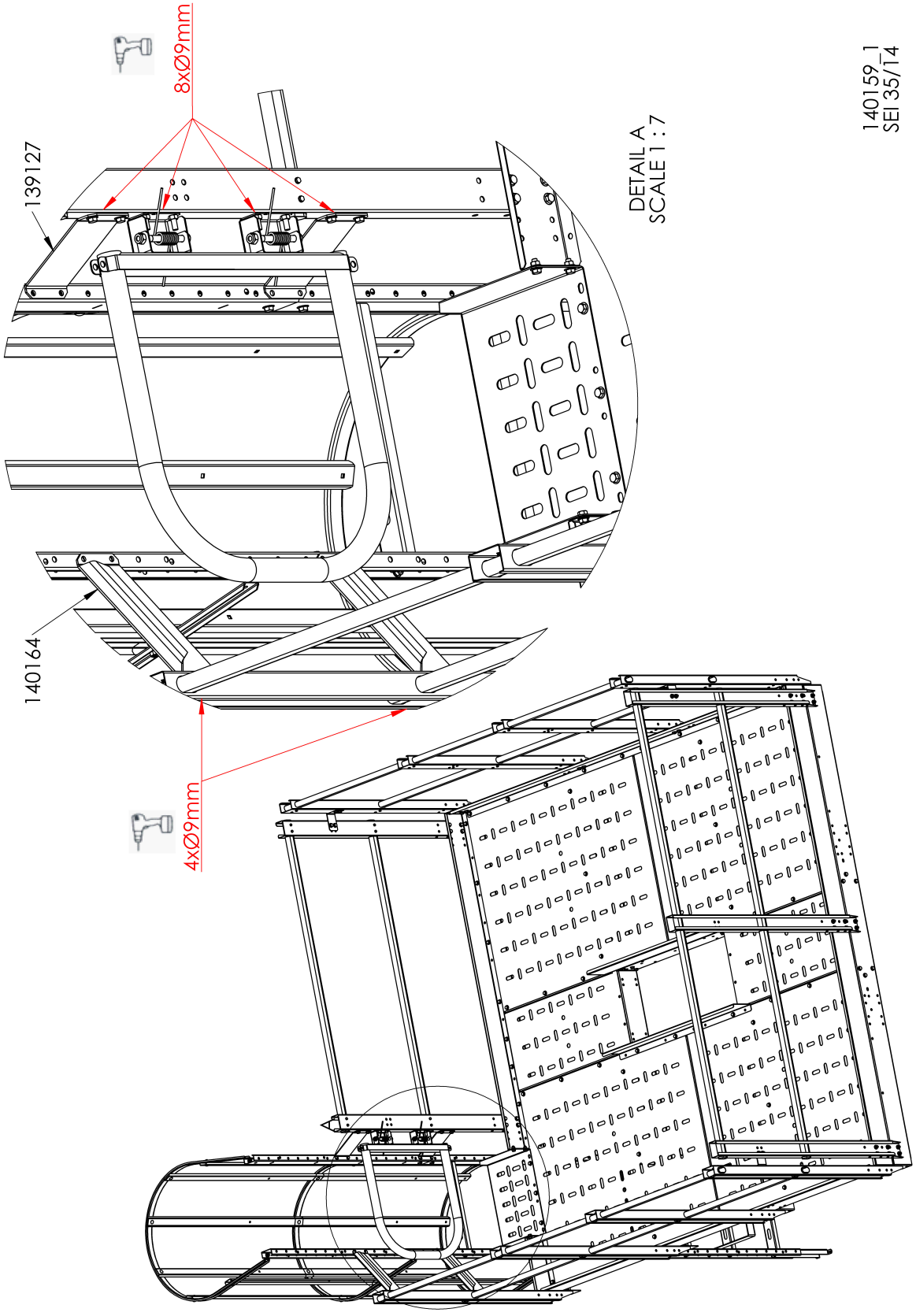
8xØ9mm
139127
DETAIL A
SCALE 1 : 7
140159_1
SEI 35/14
140164
4xØ9mm

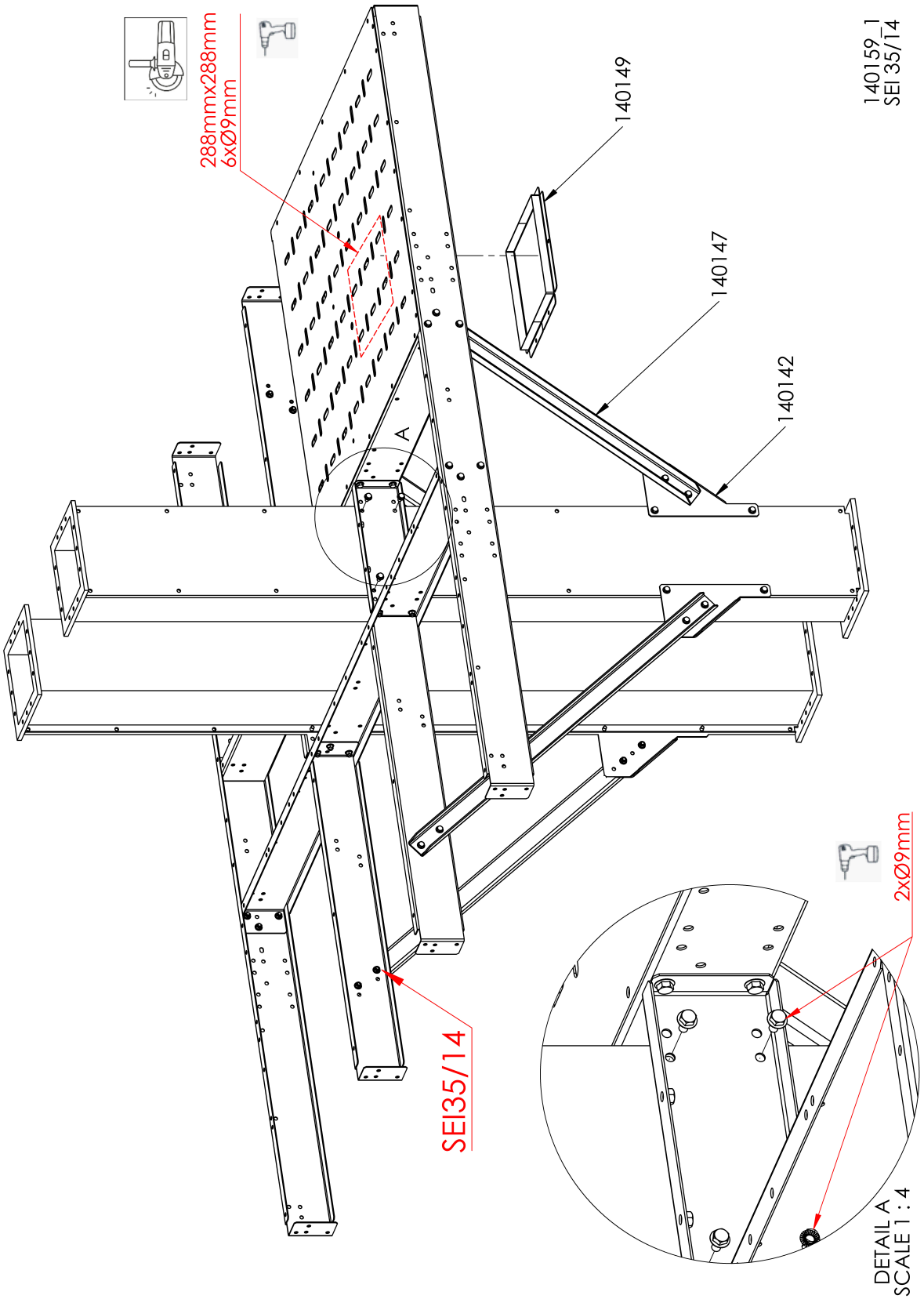
288mmx288mm
6xØ9mm
140149
140147
140142
140159_1
SEI 35/14
A
SEI35/14
2xØ9mm
DETAIL A
SCALE 1 : 4



PART OF ARSKA GROUP

Arska Tehtaat Oy

Saarentaantie 31
31400 Somero
Tel. 02 748 9700
www.arskagroup.com